HiB MAKING BATHROOMS BEAUTIFUL

Eclipse Round
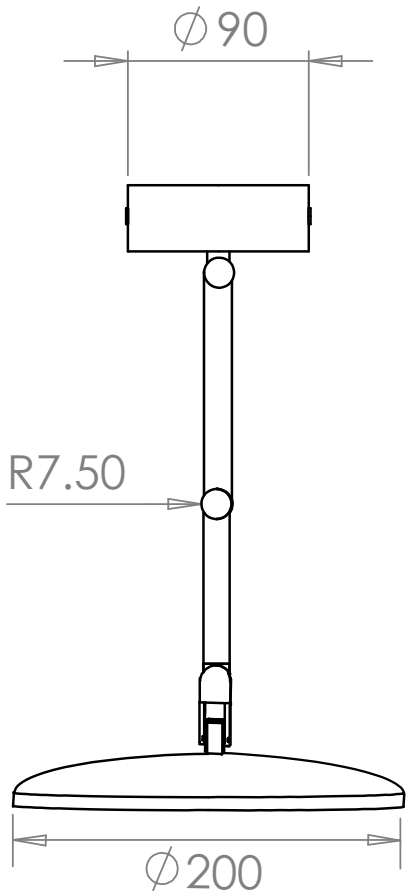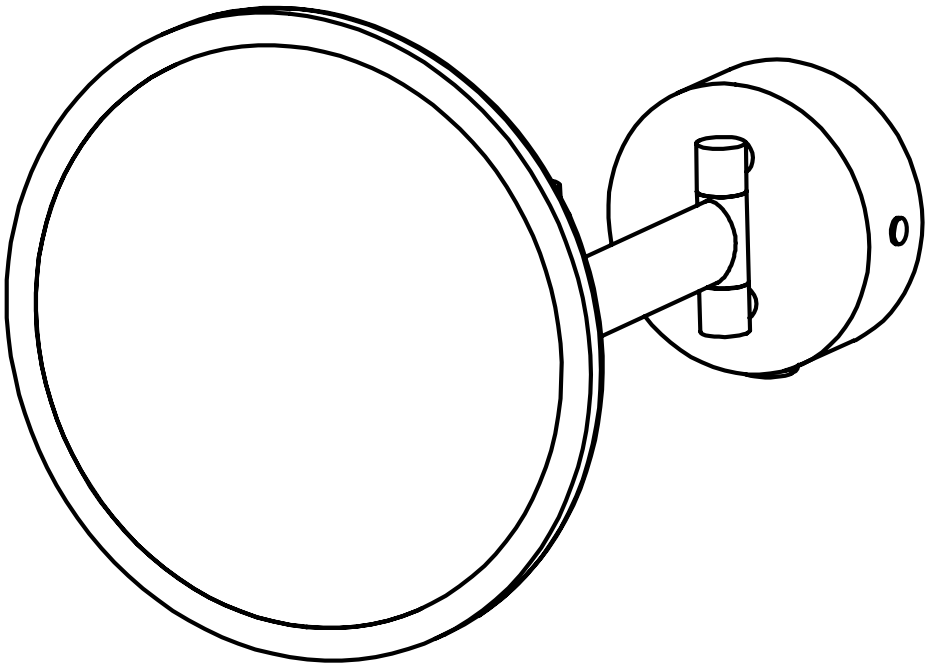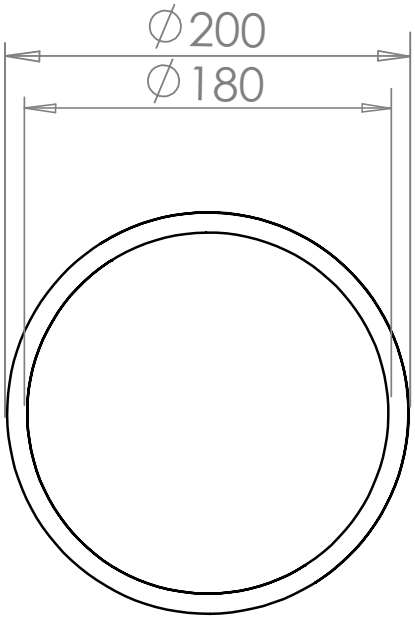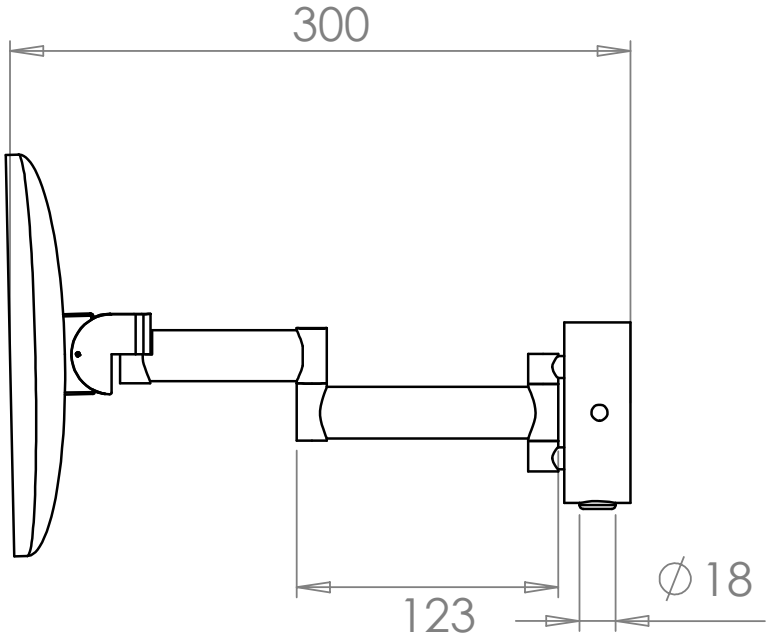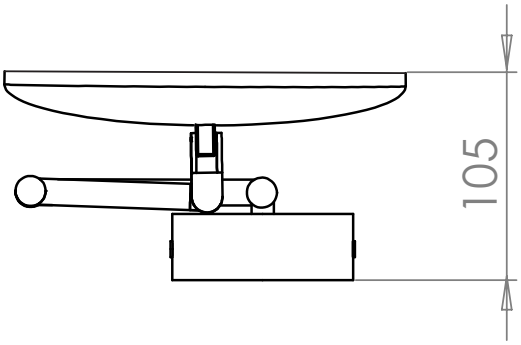
Art: 21100